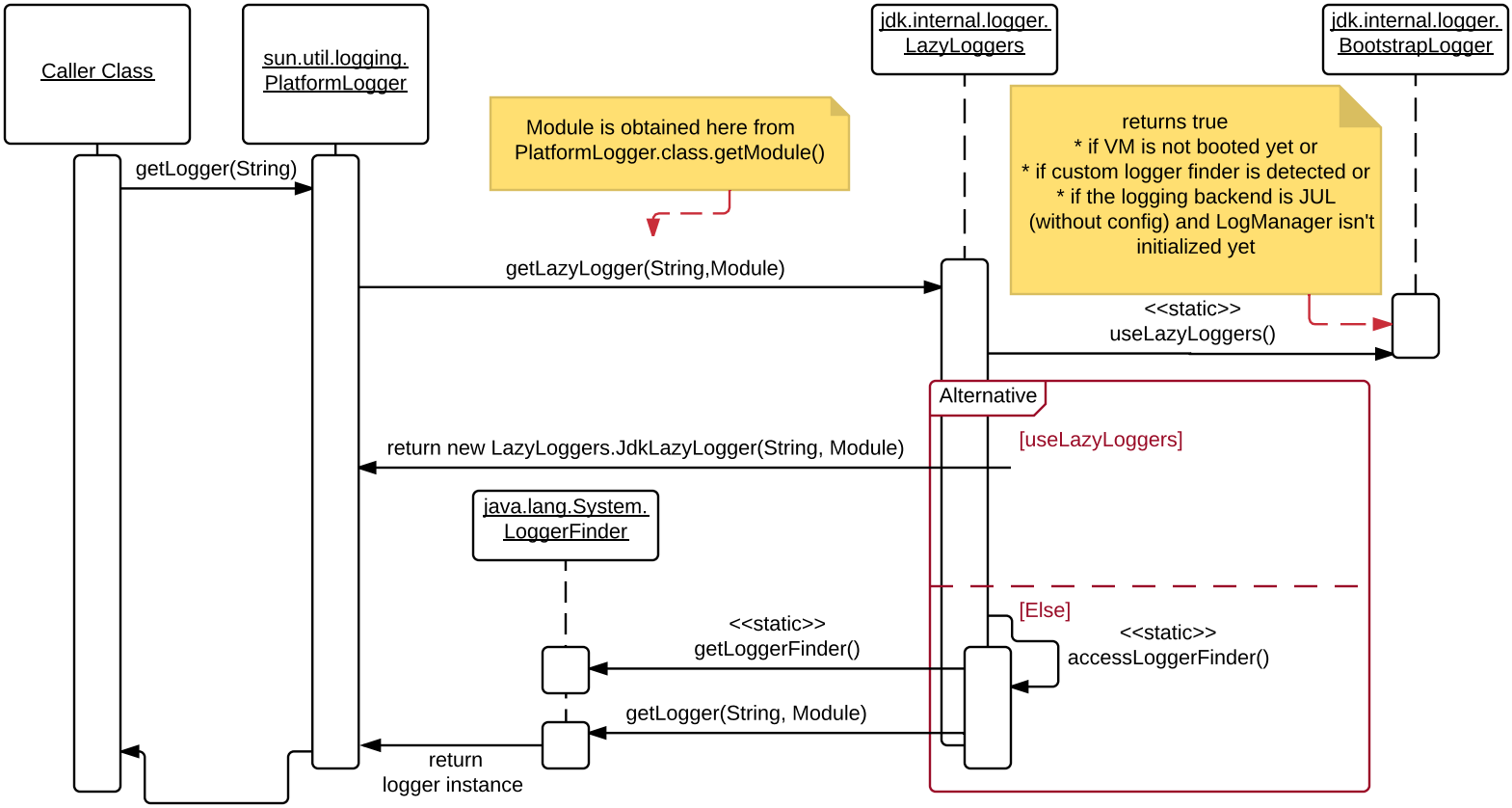
Caller Class
sun.util.logging.
PlatformLogger
jdk.internal.logger.
LazyLoggers
jdk.internal.logger.
BootstrapLogger
Module is obtained here from
PlatformLogger.class.getModule()
returns true
* if VM is not booted yet or
* if custom logger finder is detected or
* if the logging backend is JUL
(without config) and LogManager isn't
initialized yet
getLogger(String)
getLazyLogger(String,Module)
<<static>>
useLazyLoggers()
Alternative
[useLazyLoggers]
return new LazyLoggers.JdkLazyLogger(String, Module)
java.lang.System.
LoggerFinder
[Else]
<<static>>
getLoggerFinder()
<<static>>
accessLoggerFinder()
getLogger(String, Module)
return
logger instance
return new PlatformLogger(PlatformLogger.Bridge.convert(logger)